苏优信立 SUGOOD.TOP
武永康
13913235524
（微信同号）

KR 6 R1820 arc HW

Technical data

Maximum reach	1823.5 mm
Maximum payload	-
Rated payload	6 kg
Rated supplementary load, rotating column / link arm / arm	0 kg / 0 kg / 10 kg
Pose repeatability (ISO 9283)	± 0.04 mm
Number of axes	6
Mounting position	Floor; Ceiling; Wall; Desired angle
Footprint	333.5 mm x 307 mm
Weight	approx. 188 kg

Axis data

Motion range	
A1	±170 °
A2	-185 ° / 65 °
A3	-120 ° / 180 °
A4	±165 °
A5	-115 ° / 140 °
A6	±350 °
Speed with rated payload	
A1	220 °/s
A2	178 °/s
A3	270 °/s
A4	430 °/s
A5	430 °/s
A6	630 °/s

Operating conditions

Ambient temperature during operation	5 °C to 45 °C (278 K to 318 K)

Protection rating

Protection rating (IEC 60529)	IP54
Protection rating, in-line wrist (IEC 60529)	IP54

Controller

Controller	KR C4 smallsize-2; KR C4 compact

Teach pendant

Teach pendant	KUKA smartPAD

Workspace graphic

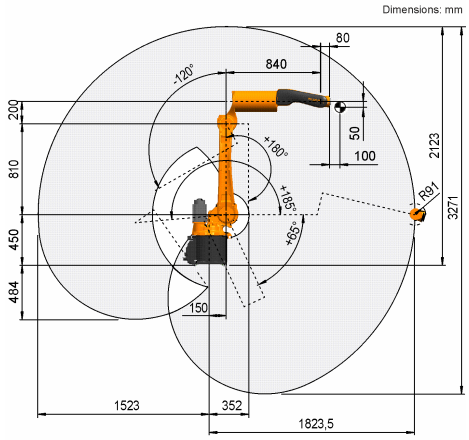

Payload diagram

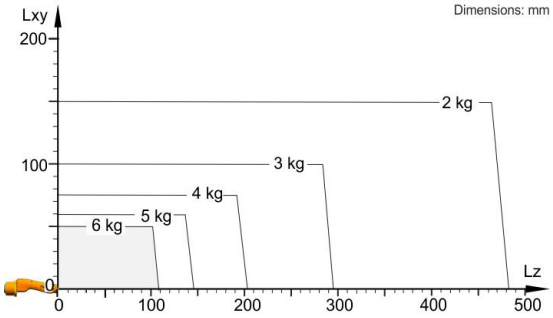

The KR 6 R1820 arc HW is designed for a rated payload of 6 kg in order to optimize the dynamic performance of the robot. With reduced load center distances, higher loads up to the maximum payload may be used. The specific load case must be verified using KUKA.Load. For further consultation, please contact KUKA Support.

Mounting flange

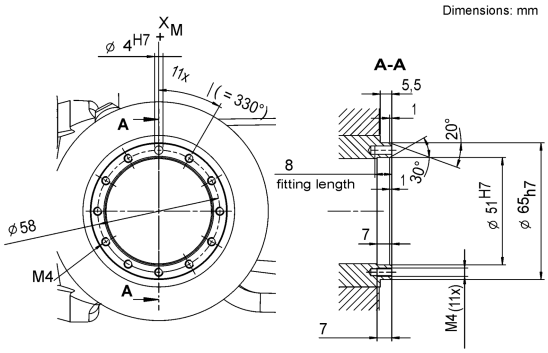

Details provided about the properties and usability of the products are purely for information purposes and do not constitute a guarantee of these characteristics. The extent of goods delivered and services performed is determined by the subject matter of the specific contract. No liability accepted for errors or omissions.
0000-255-792 / V28.1 / 18.02.2021 / en
KUKA Deutschland GmbH Zugspitzstrasse 140, 86165 Augsburg, Germany. Tel.: +49 821 797-4000, www.kuka-robotics.com